INSTRUCTION MANUAL

PIR36

360° PIR
Motion Sensor

Indoor Installation

1. INTRODUCTION

The PIR36 automatically turns on lights or any electrical device within the sensors rated load, when motion and body heat is detected. It has a 360° detection range and adjustable settings, easily integrated into new or existing installations. With an IP20 rating, the sensor is intended for indoor installations. Installation must be done by a qualified electrician.

2. SPECIFICATIONS

Function	Range
Voltage	220 - 240V AC
Power Frequency	50/60 Hz
Ambient Light	<3 - 2000 Lux (Adjustable)
Time Delay	10 sec (±3 sec) to 15 min (±2 min)
Rated Load	2000W Incandescent/ 1000W LED/CFL
Detection Area	360°
Detection Distance	8m Max <24°C
Detection Motion Speed	0.6 to 1.5m/s
Installation Type	Ceiling Surface Mount

Function	Range
Working Temperature	-20~40°C
Working Humidity	<93% RH
Power Consumption	Approx. 0.5W
Installation Height	2.2 - 4m
IP Protection	IP20 Indoor Installation
Swivel Head	No
Warranty	5 years
Standards	IEC 60669-1, IEC 60669-2-1 AS/NZS 60669.1, AS/NZS 60669.2.1

3. FUNCTION

a. Sensor Can identify between day and night (Lux Mode):

The consumer can adjust working state in different ambient light. It can work in the day time and at night when it is adjusted on the "☼" (sun) position (max). It can work in the ambient light less than 3 LUX when it is adjusted on the "3" position (min). As for the adjustment pattern, please refer to the testing pattern.

b. Time-Delay is added continually:

When the sensor detects movement while the light is already on, the countdown timer resets. This means the light will remain On for the full set duration from the moment of the latest detection.

c. Adjustable Time Delay:

The sensor can be set according to the consumer's desire (10s, 30s, 90s, 3min, 7min, 15min)

4. CONTROL SETTING INFORMATION

- Turn the TIME knob anticlockwise to the minimum (10s). Turn the LUX knob clockwise to the maximum ☼ (Sun).
- Switch on the power; the sensor will require 30 seconds to warm up. Once the sensor detects movement, the lamp will turn On. If no other movement is detected within the time duration set, the light will turn Off within the 10 seconds ±3 sec.
- Turn the LUX knob anticlockwise to the minimum (3). If the ambient light is more than 3 Lux, the sensor is not able to function. If the ambient light is less than 3 Lux (dark), the sensor will operate.

Note: When testing in daylight, please turn Lux knob to ☼ (Sun) position, otherwise the sensor will not work!

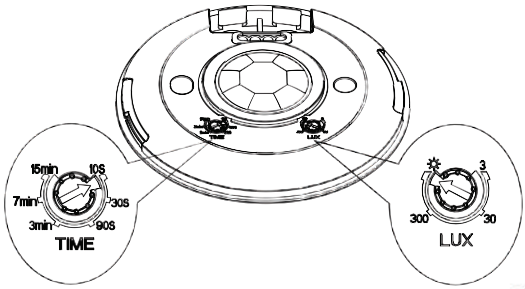

5. SENSOR INFORMATION

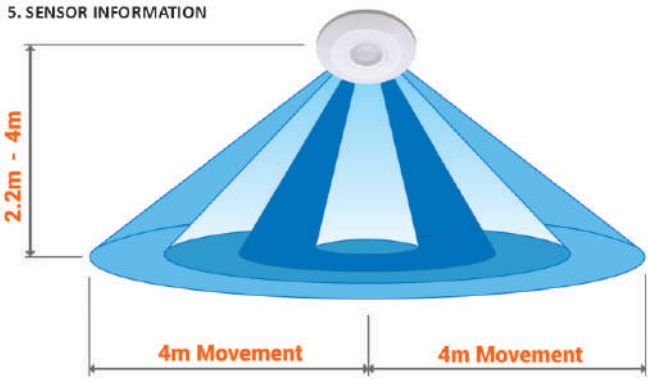

6. INSTALLATION & WIRING OPTIONS

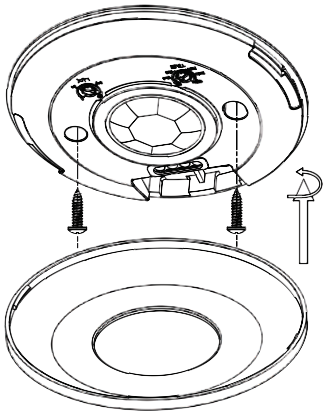

- Unscrew and remove fixing bracket from base of the sensor.
- Insert the power cable into the slot provided.
- Connect the power cable into the terminal block as per the wiring diagram.
- Identify the ideal field of view and use fixing bracket mounting holes to ensure correct alignment for motion sensor.
- Drill holes and screw the fixing bracket to the marked location.
- Reconnect the sensor to the fixing bracket and fasten the screws.
- Once installation is complete, swivel the head to point in the intended direction, secure it, and turn on the power to test.

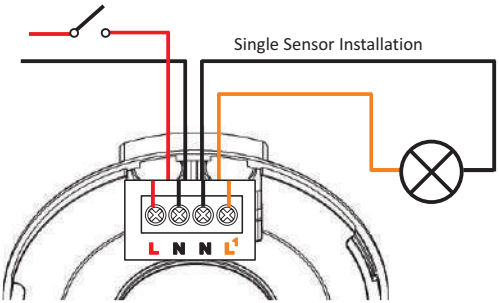

WARNING: Danger of Death Through Electrical Shock

- Must be installed by professional electrician.
- Disconnect power source.
- Cover or shied any adjacent live components.
- Ensure device cannot be switched on.
- Check power supply is disconnected.

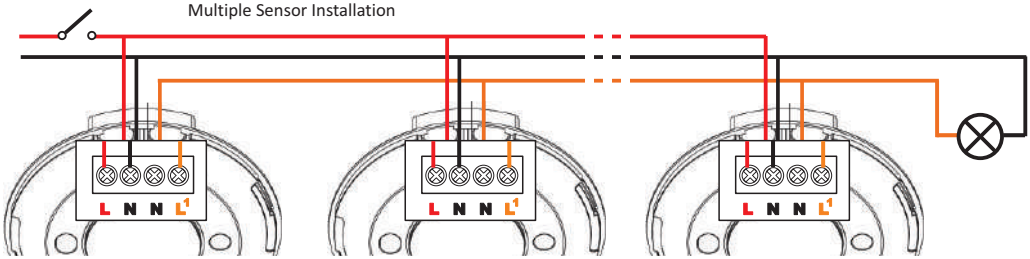

7. INSTALLATION ADVICE

- Avoid pointing the detector towards objects with highly reflective surfaces, such as mirrors etc.
- Avoid mounting the detector near heat sources, such as heating vents, air conditioning units, light etc.
- Avoid pointing the detector towards objects that may move in the wind, such as curtains, tall plants etc.

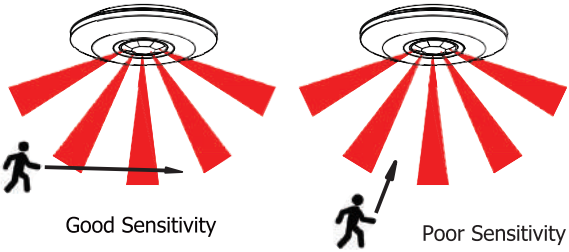

Note: The PIR sensor operates by detecting motion when the detector beams are interrupted, typically by the movement of an object or a walking person. If a person walks directly in front of or towards the beam, the sensor may not detect movement. However, when two beams are crossed, the PIR sensor detects movement, as it picks up the change in the infrared radiation pattern caused by the interruption of both beams. This method increases detection accuracy and reduces the chances of false or non-detection.

8. TROUBLESHOOTING

PROBLEM	POSSIBLE CAUSE	PROPOSED SOLUTION
Light or load does not turn on when movement is detected	1. No mains voltage	• Ensure connections to the power source and load is correct • Check the Circuit breakers and switches • Ensure supply voltage is between 220V and 240V AC
	2. Surrounding light may be too bright	• Check if the Lux setting corresponds with the ambient light conditions • Relocate the PIR sensor
	3. Control settings incorrect	• Check if the Time delay is set to your required settings • Check the Lux settings
	4. Sensor positioning is incorrect	• Check if there is any hindrance in front of the detector which may affect the reception of signals • Check if the ambient temperature is below 40°C • Confirm the installation height is between 2.2m and 6m
Light turns ON for no apparent reason (Intemittant fault)	1. Animals, birds or pets	• This possibly could be unavoidable
	2. Heat sources such as air conditioners, vents or heat extractor ducts activating the sensor	• Relocate the PIR sensor • Control settings may have been set at daytime which can affect the night distances and sensitivity. Reset at night
	3. Light operates during the day	• Reduce the Lux setting to the desired light setting
	4. Sensor affected when switching On/Off lights, fans or electrical devices on the same circuit	• Check for an arcing or faulty switches • Connect the PIR sensor to separate circuit
Light remains ON continuously	1. Control settings incorrect	• Check Time delay setting • Check the Lux levels
	2. False Triggering	• Redirection of PIR sensor may assist • Check the controls for Time and Lux levels
	3. Interference by sunlight	• Control settings may have been set at daytime which can affect the night distances and sensitivity. Reset at night

MAJOR TECH (PTY) LTD

South Africa

www.major-tech.com

sales@major-tech.com

Australia

www.majortech.com.au

info@majortech.com.au