Accessories

CBI Mini Rail (SAMR096)

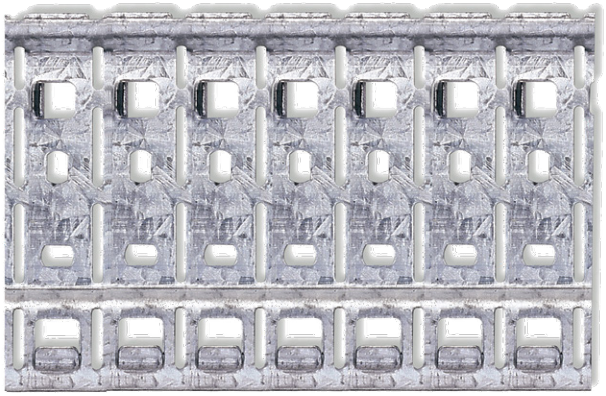

Application

For mounting of clip-in Q and S range MCBs and auxiliary products.

Features

- Quick and easy to cut to required length, needing no special tools
- Available in lengths of 1248 mm (96 ways x 13 mm) or (48 ways x 26 mm)
- Indexing of Mini Rail means the MCB is in a fixed position and therefore cannot slide

Installation

1. Cut Mini Rail to required length
2. May be fixed by spot welding to the panel, mounting with screws or pop-riveted

Mini Rail Fuchs Rail-to-Rail Adaptor Plate (SAMR101)

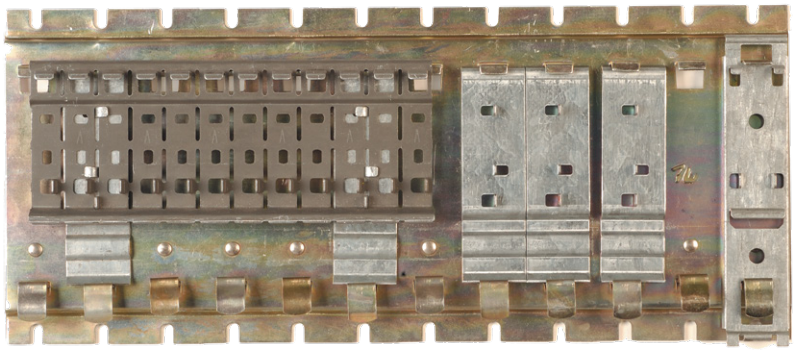

Application

This plate facilitates the installation of Mini Rail to an existing Fuchs clip tray

Installation

1. Insert two or more Rail-to-Rail adaptor plates into the Fuchs clip tray
2. Position the required length of Mini Rail onto the adaptor plates
3. Bend over the protruding flaps to secure the Mini Rail to the adaptor plate
4. Install Q and S range MCBs and auxiliary products onto the Mini Rail

Mini Rail Fuchs Rail-to-Rail Adaptor Plate (SAMR100)

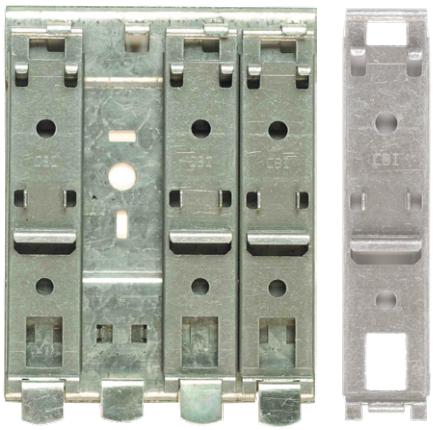

Application

This plate allows for the installation of Q and S range MCBs into the old CF tray (Heinemann clip tray). It is not suitable for installation of Q and S range MCBs when installed into the Fuchs clip tray (mounting of MCBs inhibited by the yellow posi-clip).

Installation

1. Insert two or more Rail-to-Rail adaptor plates in the Heinemann clip tray
2. Install Q and S Range MCBs and Auxiliary Products onto the Mini Rail

Accessories

Neutral Bar (SANB000)

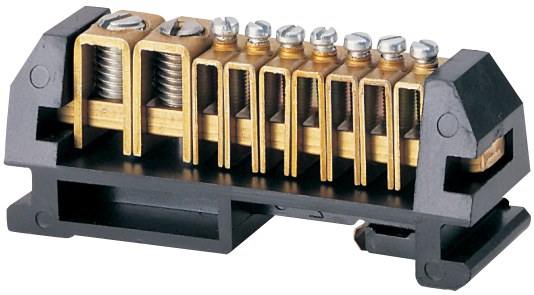

Application

The type QAN neutral bar can be clipped conveniently to the Mini Rail mounting facility to provide additional neutral connections. This enables each neutral conductor to be connected to, or removed from, the neutral bar without disturbing the connection of any other neutral. Can also be fitted into a Mini Rail.

Features

- Provides seven additional neutral terminations
- Enables quick isolation of individual circuits
- Ensures better connections
- Easy to use terminals 2 x 25 mm and 7 x 6 mm
- Current carrying capacity of 100 A continuously

Installation

1. Insert the top of the unit in the Mini Rail and push unit in to engage the spring clip

Q Range Handle Lock (QFAP001)

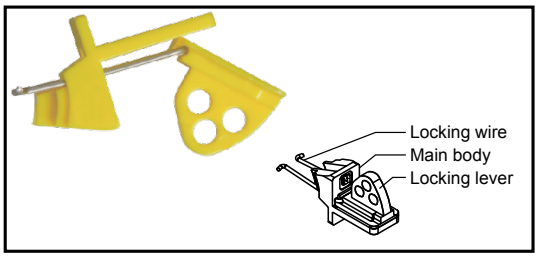

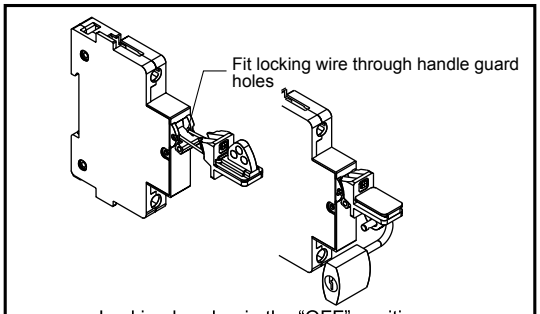

Locking breaker in the "OFF" position

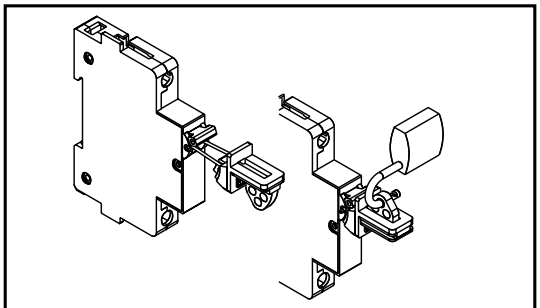

Locking breaker in the "ON" position

Application

The handle lock can be used to lock the Q Range circuit breakers and earth leakage units (RCD) in either the ON or OFF position.

Features

- Moulded with self extinguishing yellow thermoplastic
- Can accommodate up to three padlocks with a 3 mm shank diameter
- Can be used on single and multi pole units
- Can be fitted to switches and MCBs
- Locking mechanism does not impede the internal tripping action of the break or RCD

Installation

1. Open the locking lever by hinging it outwards
2. Push the lever towards the main body so that the wires protrude

To lock breaker in the OFF position

3. Squeeze the locking wires between the thumb and forefinger and clip them into holes of handle guard
4. Move the main body towards the breaker until it fits snugly in the recess above the handle. (Handle is in OFF position)
5. Hinge the locking lever back into place
6. Insert up to three padlocks with a 3 mm shank diameter

To lock the breaker in the ON position

7. Squeeze the locking wires between the thumb and forefinger and clip item into holes of handle guard
8. Move the main body towards the breaker until it fits snugly in the recess above the handle. (Handle is in ON position)
9. Hinge the locking lever back into place
10. Insert up to three padlocks with a 3 mm shank diameter

Accessories

Escutcheon Blank (SAEB000)

Application

To close 26 mm wide space in the panelboard

Features

To prevent unauthorised access to panelboard through unused space

Installation

Insert the top of the unit into the panel front, then press upwards to clip in

Safety Blank (SFEB000)

Application

To close blank 13 mm spaces in a panelboard

Features

- Prevents unauthorised access to panelboard through unused space
- Safety blank can be taken out only once the panelboard cover has been removed

Installation

Insert the top of the unit in the Mini Rail and push unit in to engage the spring clip. Close cover.

Shrouds (Q-Range MCBs)

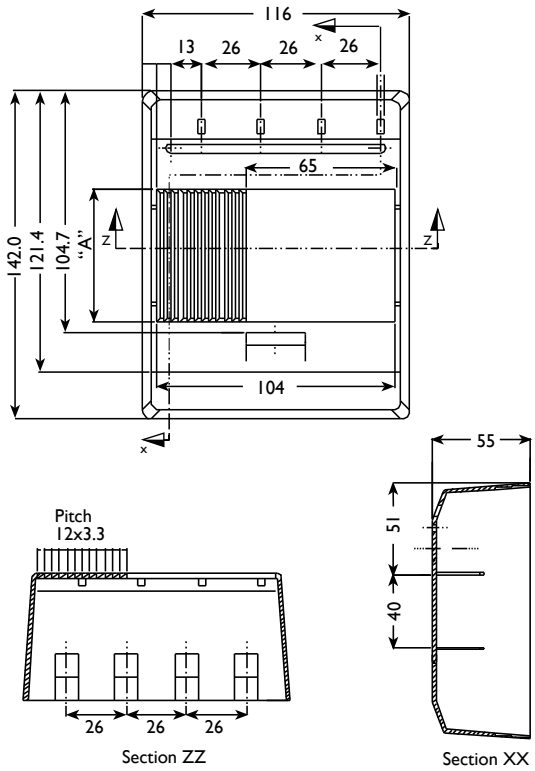

Application

Used to cover surface mounted MCBs prevent access to the terminal. A sealing facility is provided for sealing with a plumb wire.

Features

- Fits all MCBs (available for both 57 mm and 45 mm escutcheons)
- Manufactured in flame retardant thermoplastic
- The MCBs are easily seen through the cut-outs
- Gives complete shielding of line and load terminals
- Kit is complete with MCB mounting clips, woodscrews and shroud sealing screws

Dimensional Data

Shroud Type	Overall Dimensions (mm)			Escutcheon Width
	H	W	D	
2	142	38	55	26
4	142	64	55	52
6	142	90	55	78
8	142	116	55	104

Accessories

Shroud Kit Mounting Installation (3670145)

1. Mount item 1 onto circuit breaker as shown in figure 1.
2. Pull down clip-in spring (item 3) to extend position as shown in figure 2 and secure units using self-tapping screws (item 2).
3. Clip mounting nut (item 4) into each circuit breaker (figure 3).
4. Note: For circuit breakers with recessed front use the supplied spacer (item 6) with the mounting nut (item 7) (figure 4).

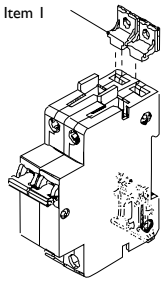

Figure 1

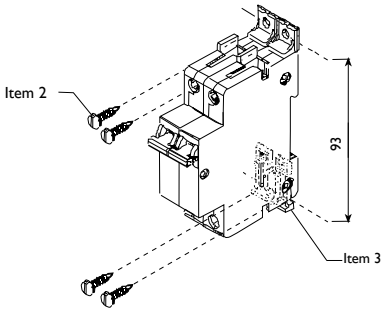

Figure 2

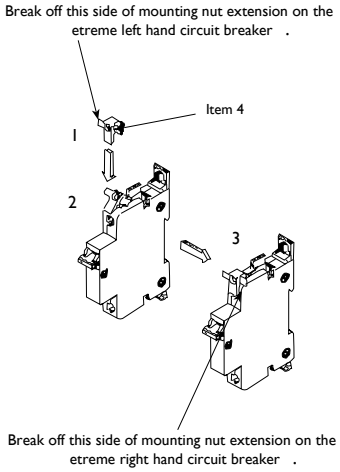

Figure 3

1. Remove cut-out on shroud if necessary to accommodate the number of circuit breakers installed as shown in figure 5. The cut-outs for the circuit breaker wires must also be removed as required.
2. Secure shroud using at least two mounting screws (item 5) as shown in figure 6.
3. Final assembly shown in figure 7.

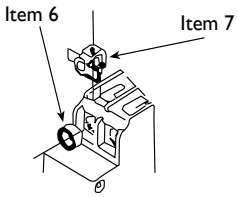

For circuit breakers with recessed front use the supplied spacer with the mounting nut .

Figure 4

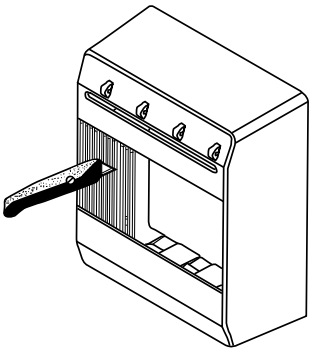

Figure 5

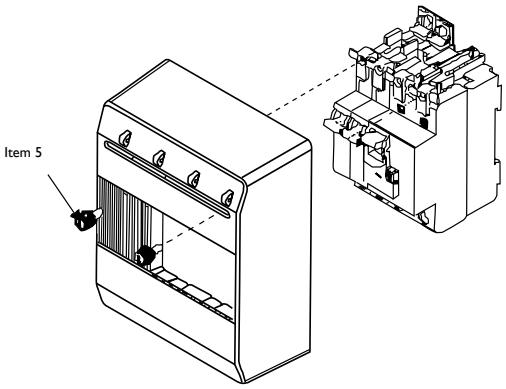

Figure 6

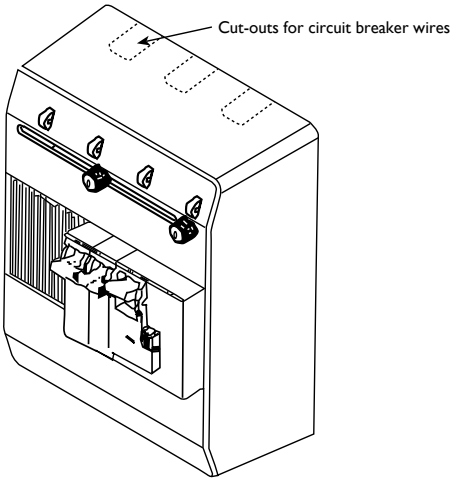

Figure 7

Accessories

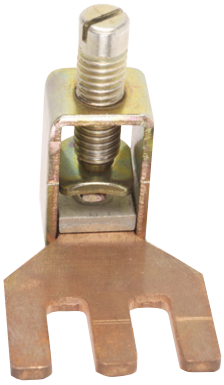

Busbar Link (1 phase or DC only)

Application

- Used to loop 13 mm MCBs when the conductors are too large for both to fit into the same terminal
- For use on QY parallel bridge MCBs

Features

- 2 pole busbar with box terminal capable of carrying 100 A continuously (box terminal – 50 mm² cable : max)
- 3 pole busbar with box terminal capable of carrying 150 A continuously

(box terminal – 95 mm² cable : max)

Installation

Insert into the MCB terminals and tighten the terminal screw

Busbar Link (SABL000)

Application

Used to loop 13 mm MCBs when the conductors are too large for both to fit into the same terminal

Features

Current carrying capacity 100 A continuously

Installation

Insert into the MCB terminals and tighten he terminal screw

Busbar Extended Lug Terminal

Application

For connecting lug type connections to MCB type QA and QF

Features

Current carrying capacity 100 A continuously

Installation

Insert into the MCB terminals and tighten the terminal screw

Accessories

Busbar – Uninsulated

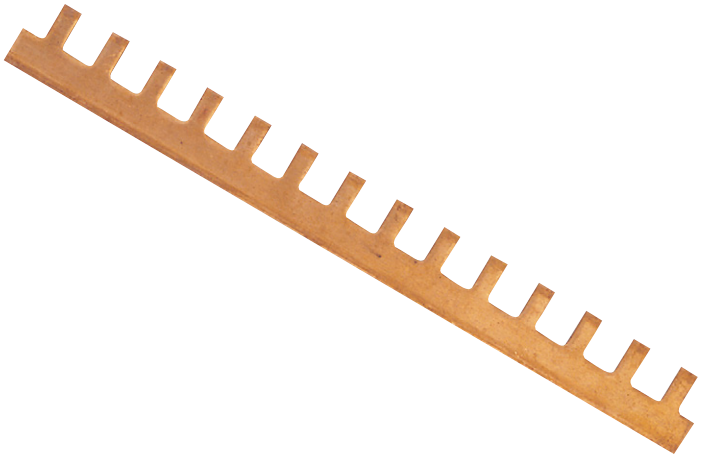

Application

For single phase loop connection of MCBs top busbar connection

Features

- Current carrying capacity 60 A continuously. (Where total current exceeds 60 A, two busbar lengths can be used, one on top of the other)
- Short circuit stability: Q Range – 10 kA
- Available for Q-Range MCBs in 13 mm, 18 mm and 19.5 mm modules

Installation

Ensure connections are tight

Available Lengths

- QA(13), QF(13): 54 modules (702 mm)
- QF(19): 36 modules (684 mm)
- QH, QF(26): 36 modules (936 mm)

Busbar – Insulated (3670009 / 10)

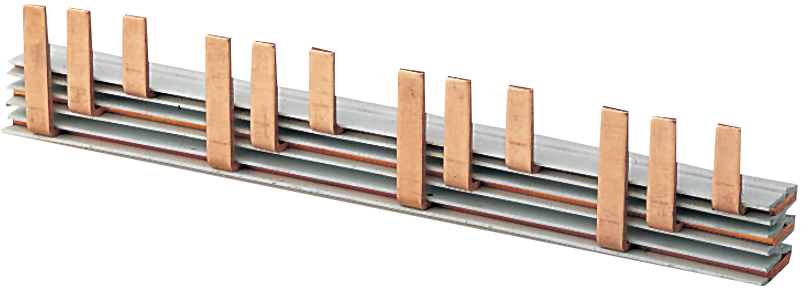

Application

For three phase loop connection of MCBs

Features

- Current carrying capacity 100 A
- Insulated voltage 3 kV AC
- Short circuit stability 10 kA

Installation

Ensure connections are tight

Available Lengths

- 1 metre

© 2016.09 CBI (Pty) Ltd. All Rights Reserved.

Please review our Customer Terms and Conditions on www.cbi-lowvoltage.co.za

All rights reserved. Unless otherwise indicated, all materials on these pages are copyrighted by CBI (Pty) Ltd. No part of these pages, either text or image may be used for any purpose other than personal use. Therefore, reproduction, modification, storage in a retrieval system or retransmission, in any form or by any means, electronic, mechanical or otherwise, for reasons other than personal use, is strictly prohibited without prior written permission. CBI (Pty) Ltd reserves the right to alter any details of this document without notice and while every effort is made to ensure the accuracy of the content, no warranty is given as to the accuracy of this document and no responsibility will be accepted for error or misinterpretation and any resulting loss.

AUSTRALIA
CBI-electric: Australia
27 Wedgewood Rd, Hallam
Victoria 3803 Australia
Tel: +61 3 8752 9300
Fax: +61 3 9796 5407
Email: sales@cbi-electric.com.au
Website: www.cbi-electric.com.au

SOUTH AFRICA
CBI-electric: low voltage
Tripswitch Drive Elandsfontein
Gauteng South Africa
Tel: +27 11 928 2000
Fax: + 27 11 392 2354
Email: cbi@cbi-electric.com
internationalsales@cbi-electric.com
Website: www.cbi-lowvoltage.co.za

USA
CBI-electric: North America
35 E. Uwchlan Ave Suite 328
Exton PA 19341 USA
Tel: +1 610 524 9949
Fax: +1 610 524 9945
E-mail: info@cbibreakers.com
Website: www.cbibreakers.com

A member of the REUNERT Group