

WATERTIGHT JUNCTION BOXES

SCREWED LID - IP55
100x100 – 120x80 – 150x110 – 190x145

TECHNICAL DATA SHEET

Directive	LVD 2014/35/EU					
Standards Amends	EN 60670-1:2005+A1:2013 Boxes and Enclosures, Electrical Installations EN 60670-22:2006 Boxes and Enclosures, Particular Requirements EN 60529 Degrees of Protection , Enclosures, IP Rate					
RoHS Compliant	2022/95/EC Restriction of Hazardous substances, RoHS					
Applications	Indoor – Outdoor - Residential – Industrial Plastic Junction box with Screwed Lid - Plastic Screws Wiring, Junction or Extension With flexible Glands, entries for Accessories - Conduits - Cables					
Installations	Exposed – Wall mounted Wiring, Power, Lighting, Automation, Telecom, CCTV, 					
Material	Polyvinyl Chloride > U-PVC					
Characteristics	IP Rate		*Solid*	**5**	*Water*	**5**
	Glow Wire Test		850 °C			
	Resistance - UV		R			
	Resistance - Chemicals		R			
	Resistance - Fire		FR-SE			
	Dielectric Strength		400V			
	Temperature range		-15 °C		+60 °C	
	Color.1	Grey RAL7035	Color.2		White	

WATERTIGHT JUNCTION BOXES

SCREWED LID - IP55



TYPE	100x100 PS/ G	100x100 PS/ W
CODE	32-21009-100	32-21024-100
A _mm	105	105
B_mm	50	50
D Pipe OD Ø_mm	16/20/25	16/20/25
E Entries Ø_mm	29	29
COLOR	Grey	White
PACKING / pcs	60	60

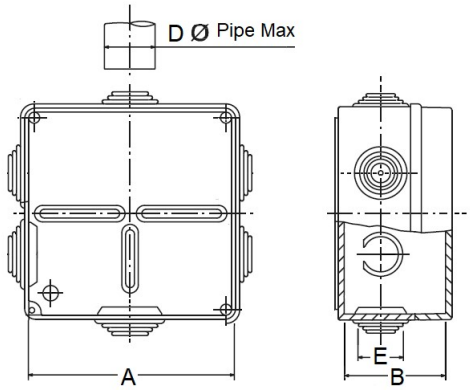



TYPE	120x80
CODE	32-21006-120
A _mm	120
B / mm	80
C / mm	50
D Pipe OD Ø_mm	16/20/25
E Entries Ø_mm	29
COLOR	Grey
PACKING / pcs	50

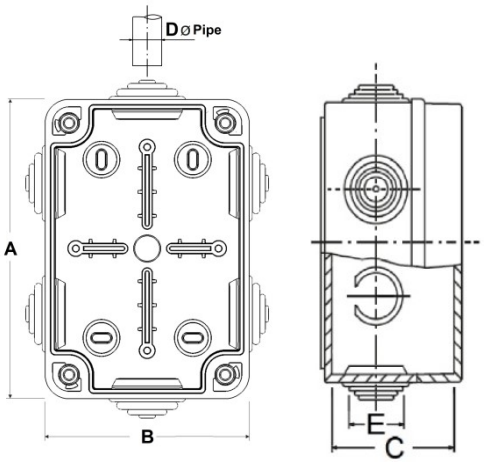



TYPE	150x110	190x145
CODE	32-21007-150	32-21008-190
A _mm	150	190
B / mm	110	145
C / mm	70	70
D Pipe OD Ø_mm	16/20/25	16/20/25/32
E Entries Ø_mm	29	37
COLOR	Grey	Grey
PACKING / pcs	24	24

